Depth Tension Line Speed Panel USB R9 PCB

The Depth, Line Speed and Line Tension Panel uses three industrial process meters to provide simultaneous digital readout of the three measurements. Meter 1 is setup in a counting mode and can accommodate virtually any encoder resolution. Meter 2 is setup in a rate \ counter indicator mode and runs from the same encoder signals as Meter 1. Meter 3 senses a 4 - 20 ma signal from a pressure transducer connected to the measure head weight indicator system. Meters for other types of line weight sensor are available.

The panel is intended to be powered by a 12 volt battery and contains power supply providing regulated 12.0 volts and 5.0 volts for indicator and encoder power. The panel also provides 24 volts excitation for the pressure transducer. The encoder pulses are converted to depth and direction signals and routed to the depth and line speed meters and are also buffered and output to the rear panel connectors for input to the logging system. A retransmitted 4 - 20 ma signal is also available at the rear panel also for input to the logging system.

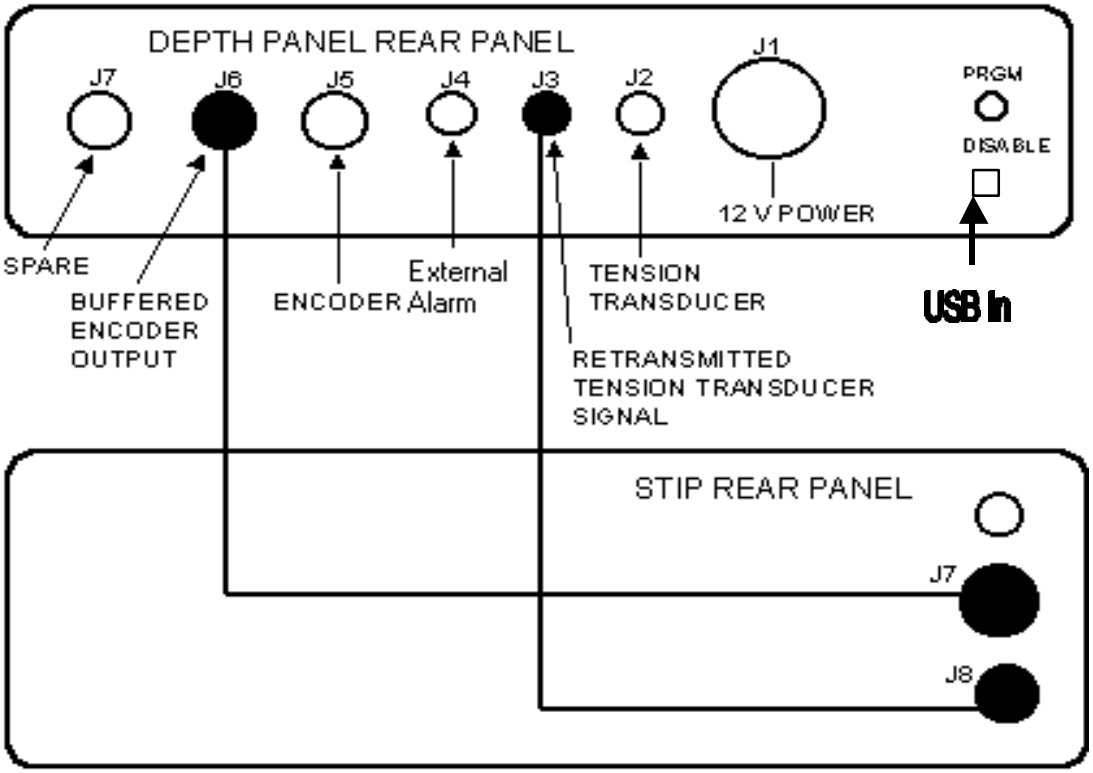

The above diagram illustrates the connections to the rear of the depth panel and the connections between the depth panel and the SDS tool interface.

The Depth Panel is shipped from SDS with the process meters setup as indicated below. These settings should be the most appropriate with optional settings as indicated.

Setup for Depth Counter 1

Two sets of DIP switches must be set for proper function of the Depth meter. Switch one is located on the back of the meter. Switch two is located on the right side, as viewed from the front,

(SW-1 On Meter - 1, 4, 7, 8 ON/DOWN and 2, 3, 5, 6 OFF/UP)

(SW-2 On Meter - 1, 2 ON/DOWN and 3, 4, 5, 6, 7, 8, 9, 10 OFF/UP)

Programming may only be accomplished by activating the `program enable' switch at the rear of the panel. Other than changing the scale factor, re-programming should only be necessary upon installation of a new meter.

CODE	ENTRY	
41	1	Set unit personality to COUNTER
43	2	Set inputs to COUNT with UP/DOWN Control
44	1	Set to SINGLE EDGE COUNTING
45	2	Set scale multiplier to .01
46	2	Set decimal point and leading zero blanking
51	-2	Set reset mode to manual reset to preset
52	-6	Set Output1 Alarm control to Boundry
53	0.01	Set Output1 Time Delay to minimum
54	3	Set Output2 Termination to Terminate at Reset
55	0.01	Set Output2 Time Delay to minimum
61	4	Set Right hand Dummy Zeros to None
66	2	Set 0perator enabled functions to Reset and Preset only

With the settings above, to read out in feet (or meters)

*** Scale factor = 100 divided by encoder pulses per foot (or encoder pulses per meter)**

JP5 Setting	120 ppr Encoder	400 ppr Encoder	600 ppr Encoder	1200 ppr Encoder
1-2 No Divide	0.8333	0.2500	0.1667	0.0833
3-4 /2	1.6667	0.5000	0.3333	0.1666
5-6 /4	3.3333	1.0000	0.6666	0.3333
7-8 /8	6.6666	2.0000	1.3333	0.6666

***Scale Factors - Note placing a "–" sign in front of scale factor reverses encoder direction.**

Setup for Depth Counter 2 / Line Speed

Two sets of DIP switches must be set for proper function of the Depth/Line Speed meter. Switch one is located on the back of the meter. Switch two is located on the right side, as viewed from the front,

(SW-1 On Meter - 1, 4, 7, 8 ON/DOWN and 2, 3, 5, 6 OFF/UP)

(SW-2 On Meter – 1, 2,10 ON/DOWN and 3, 4, 5, 6, 7, 8, 9 OFF/UP)

Programming may only be accomplished by activating the `program enable' switch at the rear of the panel. Other than changing the scale factor, re-programming should only be necessary upon installation of a new meter.

CODE	ENTRY	
41	1	Set unit personality to RATEMETER/COUNTER
42	3	Set Reset for both Rate and Counter
43	2	Set inputs to COUNT with UP/DOWN Control
44	1	Set to SINGLE EDGE COUNTING
45	2	Set scale multiplier to .01
46	2	Set counter decimal point and leading zero blanking
51	1	Set Output1 to Rate and Output2 to Counter
52	6	Set Rate Alarm control to Boundry
53	0.01	Set Rate Time Delay to minimum
54	3	Set Counter Termination to Terminate at Reset
55	0.01	Set Counter Time Delay to minimum
56	-2	Set Reset Counter to Preset 2
61	4	Set Right hand Dummy Zeros to None
62	1	Set Time Rate to 1 Second
63	1	Set Rate Update Time
64	3	Set Rate Scale Multiplier to 10
65	2	Set Rate decimal point and leading zero blanking
66	2	Set 0perator enabled functions to Reset and Preset only

With the settings above, to read out in feet per minute (or meters per minute)

*** Scale factor = 60 divided by encoder pulses per foot (or meter)**

JP5 Setting	120 ppr	400 ppr	600 ppr	1200 ppr
1-2 No Divide	0.5000	0.1500	0.1000	0.0500
3-4 /2	1.0000	0.3000	0.2000	0.1000
5-6 /4	2.000	0.6000	0.4000	0.2000
7-8 /8	4.0000	1.2000	0.8000	0.4000

Scale factor for the Depth 2 Counter is the same as the Depth 1 Counter above.

Setup of Line Tension

Programming may only be accomplished by activating the `program enable' switch at the rear of the panel. Press the PAR (Parameters) key to enter program mode and select parameter groups. Use the F1 and F2 keys to change selections.

Set each of the program groups as follows:

1-INP Input Parameters

Display	Parameter	Setting
rAn6E	Input Range – 20MA	0.02A
dECPt	Display Resolution – Full Lbs.	0
round	Display Rounding Increment	1
FILtr	Filter Setting	2.0
bAnd	Filter Enable Band	10
PtS	Scaling Points – Use 2 of 16 possible	2
StYLE	Keyboard Entry or Calibration Applied	KEY or APLY
InP 1	Low Input reading in MA	*4.000
dSP 1	Low Display Value in Pounds/Kilos	*0
InP 2	High Input reading in MA	*20.000
dSP 2	High Display Value in Pounds/Kilos	*10000

*Typical values for a 4-20ma sensor and a 0-10000 lb. Calibration.

2-FNC External Input and Function Key Parameters

Display	Parameter	Setting
USr-1	User Input 1	PLOC
USr-2	User Input 2	nO
USr-3	User Input 3	nO
F1	Function Key 1	nO
F2	Function Key 2	nO
rSt	Reset Key	nO
Sc-F1	Secondary Function Key 1	nO
Sc-F2	Secondary Function Key 2	nO

3-LOC Parameter Lockouts

Display	Parameter	Setting
HI	Maximum Reading Display	LOC
LO	Minimum Reading Display	LOC
tOt	Total Reading Display	LOC
SP-1	Setpoint 1 – Entry Enabled	Ent
SP-2	Setpoint 2	LOC
SP-3	Setpoint 3	LOC
SP-4	Setpoint 4	LOC
CodE	Security Code	0

4-SEC Secondary Function Parameters

These parameters are not used at this time.

5-tOt Totalizer Parameters

These parameters are not used at this time.

6-SPt Setpoint Parameters

Display	Parameter	Setting
SPSEL	Select Setpoint	SP-1
ACt-1	Action for Setpoint – Absolute High	Ab-HI
SP-1	Setpoint Value – Alarm Limit	*1000
HYS-1	Setpoint Hystersis	2
tOn	On Time Delay	0.0
tOF-1	Off Time Delay	0.0
out-1	Output Logic	nor
rSt-1	Reset Action	AUto
Stb-1	Standby Action	NO
Lit-1	Output Panel Light	nor

*Alarm limit value that can be changed from front panel after programming

7-SrL Serial Communications Parameters

Display	Parameter	Setting
bAUd	Baud Rate	2400
dAta	Word Length	7
PAr	Parity	Odd
Addr	Address	2
Abrv	Abbreviated	nO
OPt	Options	nO

8-Out Analog Output Parameters

Display	Parameter	Setting
tYPE	Analog Type	4-20
ASIn	Analog Assignment	InP
An-LO	Analog Low Scale Value	0.00
An-HI	Analog High Scale Value	10000
Udt	Update Time	0.0

9-FCS Factory Service Funtions

Display	Parameter	Setting
Code	Service Access Code – Restore Factory Setup	*50

*Normally will show 50. To clear all settings to factory defaults enter code 66.

Depth Panel Operation

Depth entries and alarm setup points are entered from the key pads of each meter. Depth1 meter contains the alarm for minimum depth. If the depth counter becomes less than this minimum, it will activate the depth alarm. Depth2/Line Speed meter contains the alarm for maximum line speed. If the line speed becomes greater than this maximum, it will activate the overspeed alarm. Depth2 meter will display both a depth and the line speed, which can be selected by pressing the DISP-key. The line tension meter contains the alarm for maximum line tension. If the line tension becomes greater than this maximum, it will activate the over tension alarm. Any of the alarms will activate an audible alarm, front panel LED, and a rear panel external connector. The audio alarm can be silenced for the duration of the cause of that alarm by pressing the ALM DIS button. Once the alarm condition has passed, the audio alarm will be enable again for the next alarm.

To enter a new preset depth on either depth meter, press the P2-key of that meter. The last preset depth will be displayed. The key directly under each digit will change the value of that digit. After the desired changes have been made, press the E-Key to enter the value into preset depth memory. To update the depth to the preset value, press the R-key to reset the depth.

To enter new alarm values on either depth meter, press the P1-key of that meter. After changes have been made, press the E-key to enter the value into preset alarm memory. To enter a new alarm value on the line tension meter, press the PAR-key. The F1-key and F2-key can then be used to change the value. Press the PAR-key again to store the new alarm value.

Depth Panel Circuit Description

Power from the battery is routed to the PC board and regulated to approximately 11.5 volts and 5 volts by Q1, D1 and U1 respectively. Encoder power may be selected from these two voltages by JP1 and JP2. **DO NOT JUMPER BOTH AT THE SAME TIME.** The encoder pulses are buffered by the line receiver IC2 and routed to the depth and line speed meters and to the rear panel connectors. The line tension sensor is powered by 18 volts from the line weight meter and the signal routed back to the meter. This signal is retransmitted to a connector on the rear panel.
The process meters are connected so that they are fully programmable only when the switch S2 is held open. This is to prevent inadvertent `reprogramming' from the front panels of the meters.

Interconnection Cables

The cable to connect the depth panel buffered encoder output to the tool interface panel has the following connections:

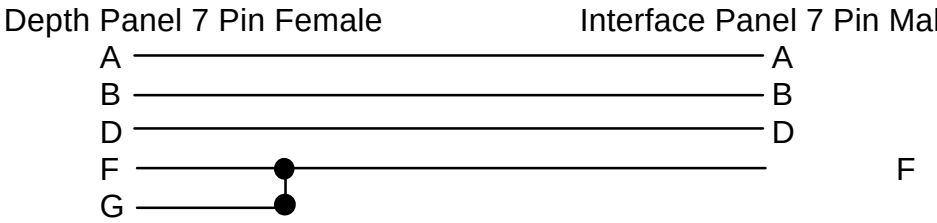

The cable to connect the depth panel encoder input to the depth encoder has the following connections:

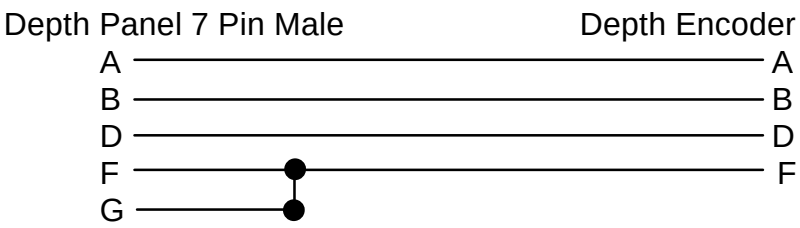

The cable for the retransmitted line tension from the depth panel to the system tool interface panel has the following connections:

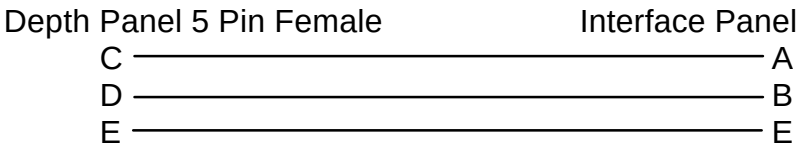

The cable for the depth panel line tension input to the pressure transducer has the following connections:

Depth Panel 5 Pin Male Pressure Transducer

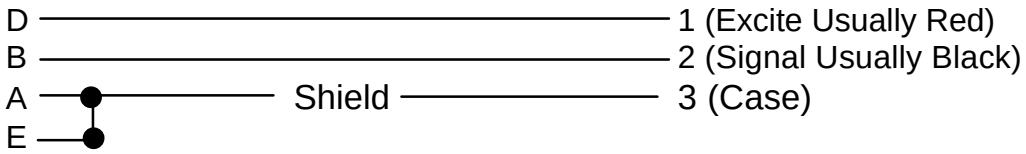

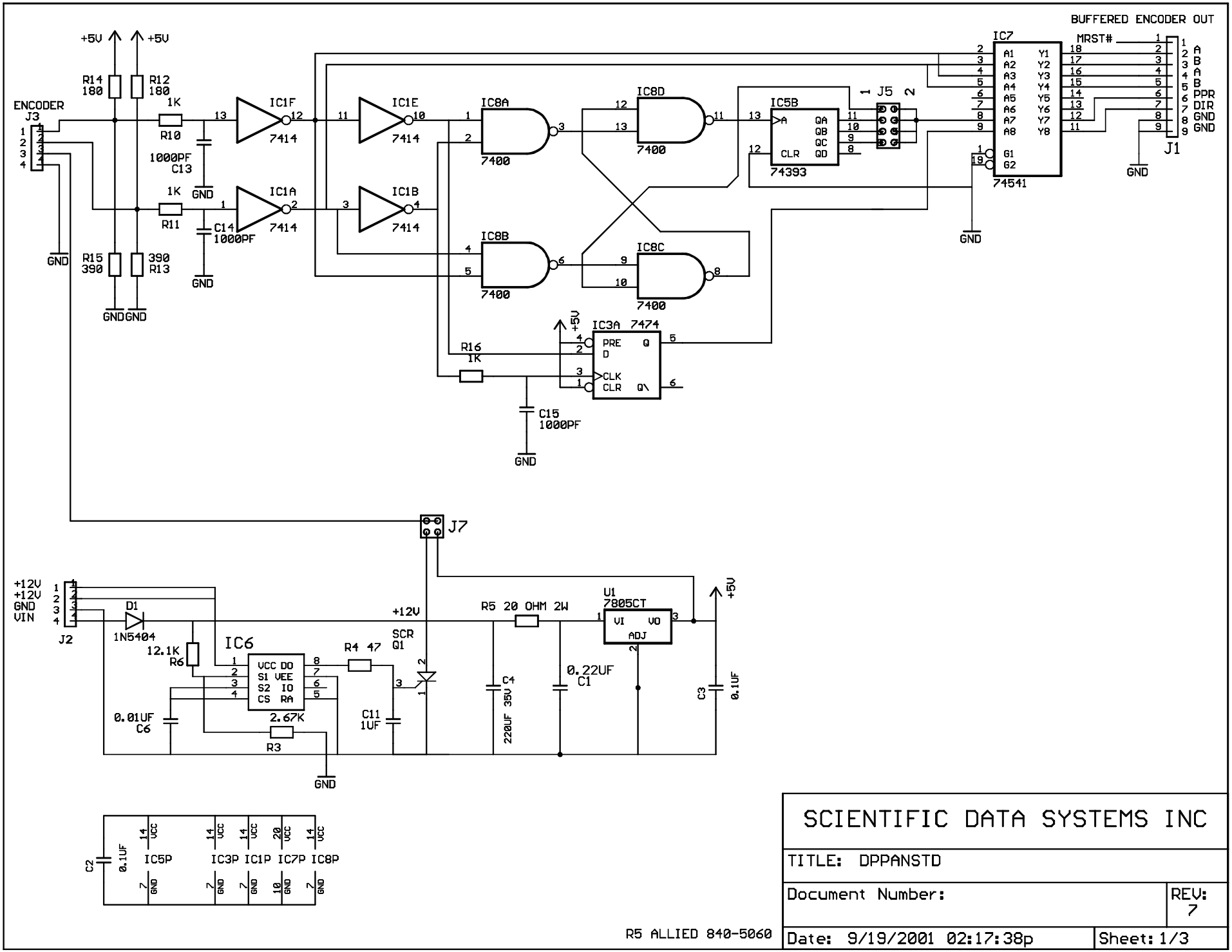
BUFFERED ENCODER OUT
ENCODER
J3
+5V
+5V
R14
180
R12
180
1K
R10
1000PF
C13
GND
1K
R11
C14
1000PF
GND
R15
390
390
R13
GND
GND
GND
IC1F
7414
IC1A
7414
IC1E
7414
IC1B
7414
IC8A
7400
IC8B
7400
IC8D
7400
IC8C
7400
IC5B
74393
CLR
J5
IC7
74541
A1
A2
A3
A4
A5
A6
A7
A8
Y1
Y2
Y3
Y4
Y5
Y6
Y7
Y8
G1
G2
MRST#
J1
A
B
A
B
PPR
DIR
GND
GND
GND
IC3A 7474
PRE
D
CLK
CLR
Q
R16
1K
C15
1000PF
GND
J7
+12V
+12V
GND
VIN
J2
D1
1N5404
12.1K
R6
IC6
VCC DO
S1 VEE
S2 IO
CS RA
R4 47
SCR
Q1
+12V
R5 20 OHM 2W
U1
7805CT
VI
VO
ADJ
+5V
C4
220UF 35V
0.22UF
C1
C3
0.1UF
0.01UF
C6
2.67K
R3
C11
1UF
GND
C2
0.1UF
IC5P
IC3P
IC1P
IC7P
IC8P
VCC
GND
R5 ALLIED 840-5060
SCIENTIFIC DATA SYSTEMS INC
TITLE: DPPANSTD
Document Number:
REV:
7
Date: 9/19/2001 02:17:38p
Sheet: 1/3

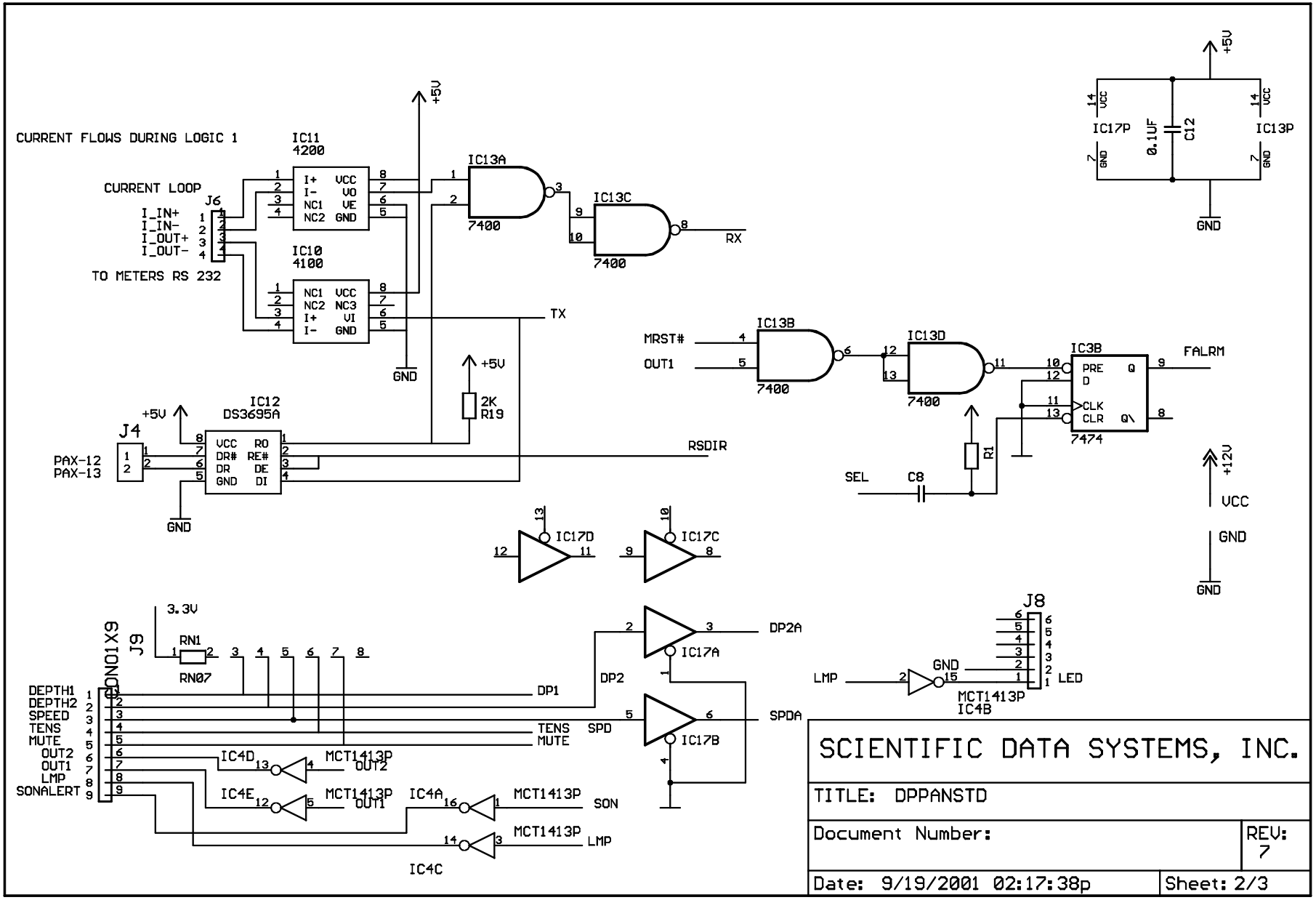
CURRENT FLOWS DURING LOGIC 1
CURRENT LOOP
I_IN+
I_IN-
I_OUT+
I_OUT-
TO METERS RS 232
J6
IC11
4200
IC10
4100
I+ VCC
I- VO
NC1 VE
NC2 GND
NC1 VCC
NC2 NC3
I+ VI
I- GND
+5V
GND
IC13A
IC13C
7400
RX
TX
2K
R19
IC12
DS3695A
VCC RO
DR# RE#
DR DE
GND DI
J4
PAX-12
PAX-13
RSDIR
IC17P
IC13P
0.1UF
C12
MRST#
OUT1
IC13B
IC13D
IC3B
PRE
D
CLK
CLR
Q
Q\
7474
FALRM
R1
SEL
C8
+12V
VCC
IC17D
IC17C
3.3V
J9
CON01X9
RN1
RN07
DEPTH1
DEPTH2
SPEED
TENS
MUTE
OUT2
OUT1
LMP
SONALERT
DP1
DP2
DP2A
SPDA
SPD
IC17A
IC17B
IC4D
IC4E
IC4A
IC4C
MCT1413P
SON
J8
LED
IC4B
SCIENTIFIC DATA SYSTEMS, INC.
TITLE: DPPANSTD
Document Number:
REV: 7
Date: 9/19/2001 02:17:38p
Sheet: 2/3

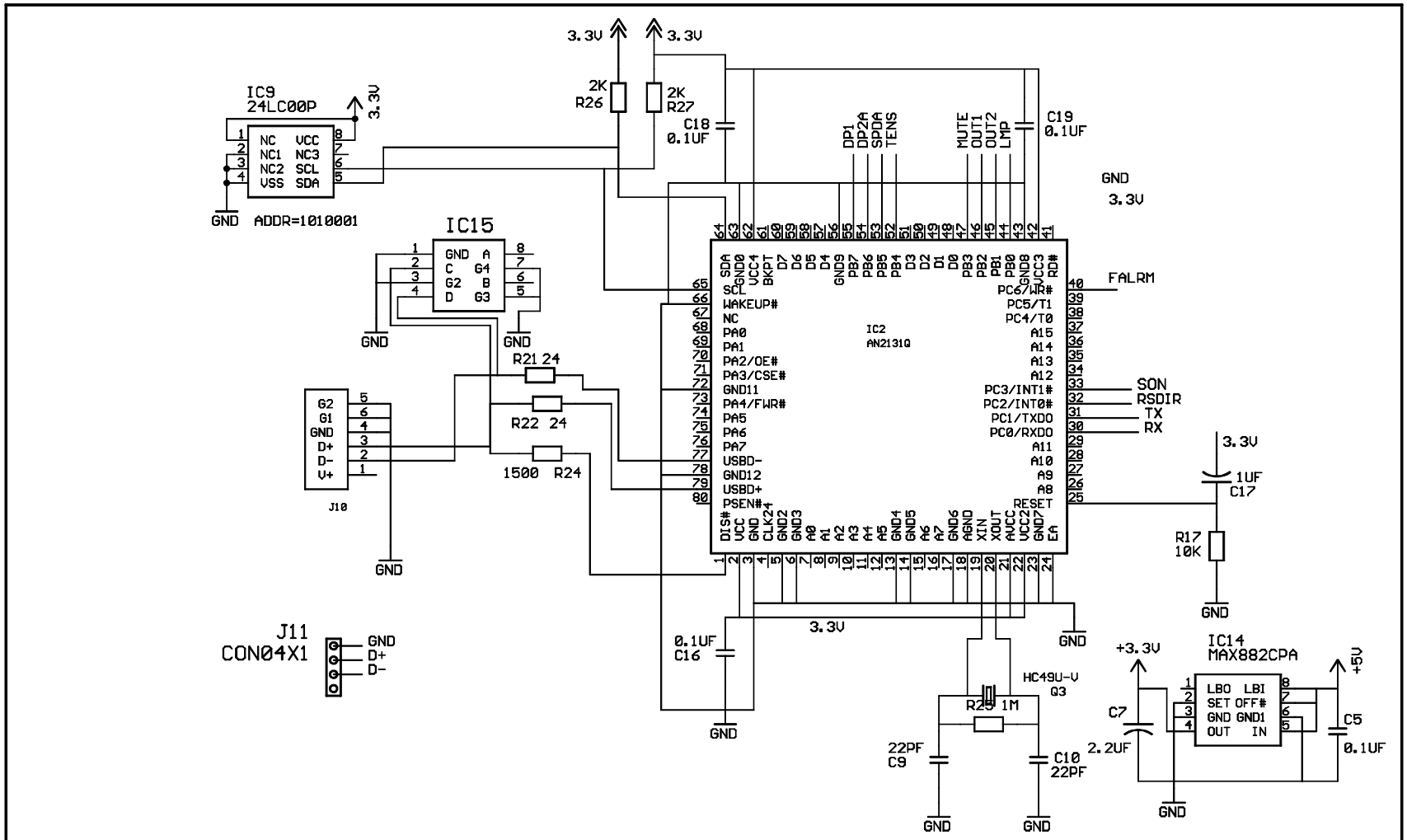
IC9
24LC00P
NC VCC
NC1 NC3
NC2 SCL
VSS SDA
ADDR=1010001
3.3V
GND
2K
R26
2K
R27
C18
0.1UF
C19
0.1UF
IC15
GND A
C G4
G2 B
D G3
R21 24
R22 24
1500 R24
G2
G1
GND
D+
D-
V+
J10
IC2
AN2131Q
FALRM
SON
RSDIR
TX
RX
R17
10K
1UF
C17
J11
CON04X1
0.1UF
C16
HC49U-V
Q3
R23 1M
22PF
C9
C10
22PF
IC14
MAX882CPA
LBO LBI
SET OFF#
GND GND1
OUT IN
+3.3V
+5V
C7
2.2UF
C5
0.1UF
SCIENTIFIC DATA SYSTEMS, INC
TITLE: DPPANSTD
Document Number:
REV: 7
Date: 9/19/2001 02:17:38p
Sheet: 3/3

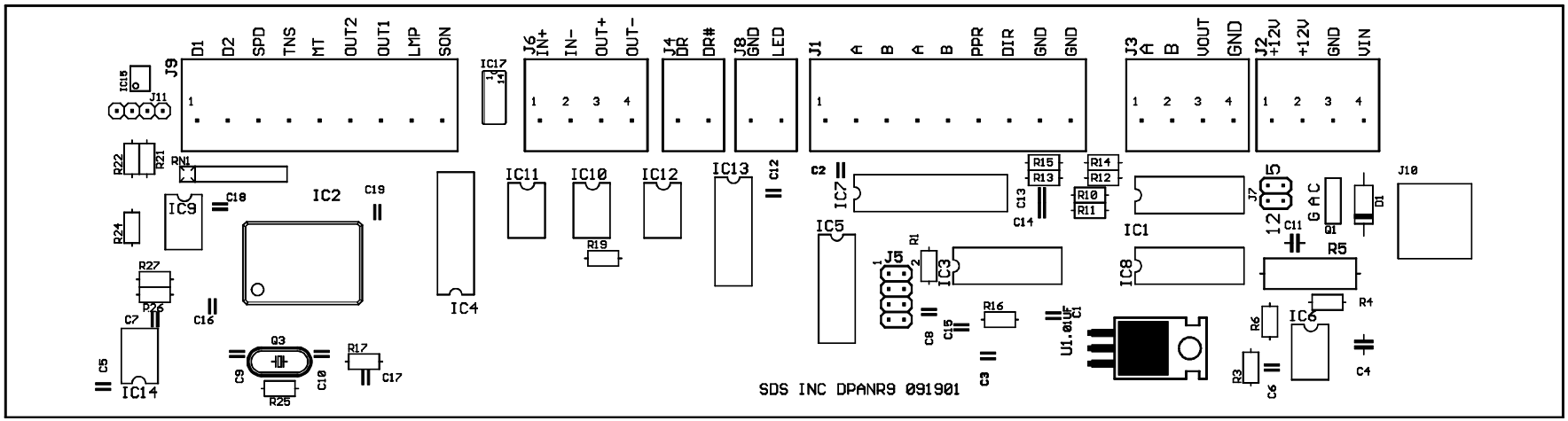

D1 D2 SPD TNS MT OUT2 OUT1 LMP SON
J9
IC15
J11
IC17
J6 IN+ IN- OUT+ OUT-
J4 DR DR#
J8 GND LED
J1 A B A B PPR DIR GND GND
J3 A B VOUT GND
J2 +12V +12V GND VIN
R22
R21
RN1
IC9
C18
IC2
C19
R24
R27
R26
C7
C16
C5
IC14
Q3
C9
C10
R25
R17
C17
IC4
IC11
IC10
R19
IC12
IC13
C12
C2
IC7
IC5
J5
R1
IC3
C8
C15
R16
C3
U1.01UF
C1
R15
R13
C13
C14
R14
R12
R10
R11
IC1
IC8
J7
12
GAC
Q1
D1
J10
C11
R5
R4
R6
IC6
R3
C6
C4
SDS INC DPANR9 091901

WIRELIST DEPTH PANEL R9 - USB

Rear Panel Connectors

10-24-2001

J1	DC Power In					
	J1-A	J10-1				+12V Battery
	J1-B	SW2-2/5	GND LUG			Chassis Ground
J2	Line Weight Input from Transducer					
	J2-A	J2-E				GND
	J2-B	J11-3				4-20ma Signal
	J2-D	J11-4				+12V Excite
	J2-E	J5-F	J2-A			GND
J3	Line Weight Retransmit to System					
	J3-C	J11-10				PAX Analog 19 -(0-20)Out
	J3-D	J11-9				PAX Analog 18 +(0-20)Out
J4	External Lamp or Alarm					
	J4-A	PCB_J2-2	BZ+			+12V Reg
	J4-B	PCB_J9-8				External Lamp
J5	Quadrature Encoder Input					
	J5-A	PCB_J3-1				Encoder A
	J5-B	PCB_J3-2				Encoder B
	J5-D	PCB_J3-3				Encoder Power
	J5-F	J2-E	J6-F			GND
J6	Buffered Quadrature to System					
	J6-A	PCB_J1-4				Buffered A
	J6-B	PCB_J1-5				Buffered B
	J6-F	J5-F	J7-F			GND
J7	Buffered Quadrature Spare					
	J7-A	PCB_J1-2				Buffered A
	J7-B	PCB_J1-3				Buffered B
	J7-F	J6-F	GND LUG			GND
J8	USB Port to Computer					
	Connected Directly to Board					

J10	Front Panel Controls					
	J10-1	J1-A				+12V Battery
	J10-2	BZ+				Reg 12V - LED
	J10-3	PCB_J9-5				Mute Switch
	J10-4	PCB_J2-4				Switched 12 Volt
	J10-5	PCB_J8-2				Led Control
	J10-6	GND LUG				GND
P10	Front Panel Controls					
	P10-1	F1-2				+12V Battery
	P10-2	LED RED				Reg 12V - LED
	P10-3	SW4-2				Mute Switch
	P10-4	SW1-1				Switched 12 Volt
	P10-5	LED WHT				Led Control
	P10-6	SW4-1				GND
J11	Line Tension Meter					
	J11-1	PCB_J2-1				Reg 12 Volt
	J11-2	GND LUG				GND
	J11-3	J2-B				4-20ma Signal
	J11-4	J2-D				+12V Excite
	J11-5	SW2-3				PGM Mode
	J11-6	PCB_J4-1				DR+
	J11-7	PCB_J4-2				DR-
	J11-8	GND LUG				GND
	J11-9	J3-D				PAX Analog 18 +(0-20)Out
	J11-10	J3-C				PAX Analog 19 -(0-20)Out
	J11-11	GND LUG				GND
	J11-12	PCB_J9-4				TNS ALM
P11	Line Tension Meter					
	P11-1	PAX-1				Reg 12 Volt
	P11-2	PAX-2				GND
	P11-3	PAX-4				4-20ma Signal
	P11-4	PAX-6				+12V Excite
	P11-5	PAX-8				PGM Mode
	P11-6	PAX-12				DR+
	P11-7	PAX-13				DR-
	P11-8	PAX-14				GND
	P11-9	PAX-18				+(0-20)Out
	P11-10	PAX-19				-(0-20)Out
	P11-11	PAX-20				GND
	P11-12	PAX-21				TNS ALM
PAX	Line Tension Meter					
	PAX-1	P11-1				Reg 12 Volt
	PAX-2	PAX-7	P11-2			GND
	PAX-4	P11-3				4-20ma Signal
	PAX-6	P11-4				+12V Excite
	PAX-7	PAX-2				GND
	PAX-8	P11-5				PGM Mode
	PAX-12	P11-6				DR+
	PAX-13	P11-7				DR-
	PAX-14	P11-8				GND
	PAX-18	P11-9				+(0-20)Out
	PAX-19	P11-10				-(0-20)Out
	PAX-20	P11-11				GND
	PAX-21	P11-12				TNS ALM

Depth and Line Speed

DP_TBA	DEPTH Meter TBA - Control					
	DP_TBA-3	LS_TBA-3	PCB_J2-1			+12V
	DP_TBA-5	DP_TBA-8	DP_TBC-5			GND
	DP_TBA-7	LS_TBA-7	SW2-6			PGM Mode
	DP_TBA-8	DP_TBA-10				GND
	DP_TBA-9	PCB_J9-2				Depth ALM
	DP_TBA-10	DP_TBA-8	LS_TBC-1			GND
	DP_TBA-11	PCB_J1-1				Reset
DP_TBC	Depth Meter TBC - Depth					
	DP_TBC-1	DP_TBC-5	PCB_J2-3			GND
	DP_TBC-2	LS_TBC-2	PCB_J1-7			DIR
	DP_TBC-3	LS_TBC-3	PCB_J1-6			PPR
	DP_TBC-5	DP_TBA-5	DP_TBC-1			GND
DP_TBD	Depth Meter TBD - Communications					
	DP_TBD-1	PCB_J6-2				Meter Communications
	DP_TBD-3	DP_TBD-5				Meter Communications
	DP_TBD-4	LS_TBD-5				Meter Communications
	DP_TBD-5	DP_TBD-3				Meter Communications
	DP_TBD-6	LS_TBD-7				Meter Communications
	DP_TBD-7	LS_TBD-3				Meter Communications
LS_TBA	Line Speed Meter TBA - Control					
	LS_TBA-3	DP_TBA-3				+12V
	LS_TBA-5	LS_TBA-8	LS_TBC-5			GND
	LS_TBA-7	DP_TBA-7				PGM Mode
	LS_TBA-8	LS_TBA-10	LS_TBA-5			GND
	LS_TBA-9	PCB_J9-3				SPD ALM
	LS_TBA-10	LS_TBA-8				GND
LS_TBC	Line Speed Meter TBC - Depth					
	LS_TBC-1	LS_TBC-5	DP_TBA-10			GND
	LS_TBC-2	DP_TBC-2				DIR
	LS_TBC-3	DP_TBC-3				PPR
	LS_TBC-5	LS_TBA-5	LS_TBC-1			GND
LS_TBD	Line Speed Meter TBD - Communications					
	LS_TBD-1	PCB_J6-4				Meter Communications
	LS_TBD-3	DP_TBD-7				Meter Communications
	LS_TBD-4	PCB_J6-1				Meter Communications
	LS_TBD-5	DP_TBD-4				Meter Communications
	LS_TBD-6	PCB_J6-3				Meter Communications
	LS_TBD-7	DP_TBD-6				Meter Communications

PC Board Connectors

PCB_J1	Encoder Connections					
	PCB_J1-1	DP_TBA-11				Reset
	PCB_J1-2	J7-A				Buffered A
	PCB_J1-3	J7-B				Buffered B
	PCB_J1-4	J6-A				Buffered A
	PCB_J1-5	J6-B				Buffered B
	PCB_J1-6	DP_TBC-3				PPR
	PCB_J1-7	DP_TBC-2				DIR
	PCB_J1-9	PCB_J3-4	GND LUG			GND
PCB_J2	12 Volt Power Distribution					
	PCB_J2-1	DP_TBA-3	J11-1			Reg 12 Volt
	PCB_J2-2	J4-A				Reg 12V - LED & Buzzer
	PCB_J2-3	DP_TBC-1	GND LUG			GND
	PCB_J2-4	J10-4				Switched 12 Volt
PCB_J3						
	PCB_J3-1	J5-A				Encoder A
	PCB_J3-2	J5-B				Encoder B
	PCB_J3-3	J5-D				Encoder Power
	PCB_J3-4	PCB_J1-9				GND
PCB_J4						
	PCB_J4-1	J11-6				DR+
	PCB_J4-2	J11-7				DR-
PCB_J6						
	PCB_J6-1	LS_TBD-4				Meter Communications
	PCB_J6-2	DP_TBD-1				Meter Communications
	PCB_J6-3	LS_TBD-6				Meter Communications
	PCB_J6-4	LS_TBD-1				Meter Communications
PCB_J8						
	PCB_J8-1					GND
	PCB_J8-2	J10-5				Led Control
PCB_J9						
	PCB_J9-1					
	PCB_J9-2	DP_TBA-9				Depth ALM
	PCB_J9-3	LS_TBA-9				SPD ALM
	PCB_J9-4	J11-12				TNS ALM
	PCB_J9-5	J10-3				Mute Switch
	PCB_J9-8	J4-B				External Lamp
	PCB_J9-9	BZ-				Buzz Control

Misc. Items

F1	Fuse					
	F1-2	SW1-2				+12V Battery
	F1-2	P10-1				Fused +12V
SW1	Power on/off					
	SW1-1	P10-4				Switched 12 Volt
	SW1-2	F1-1				Fused +12V
SW2	Program Mode					
	SW2-2	SW2-5	J1-B			GND
	SW2-3	J11-5				PGM Mode
	SW2-5	SW2-2	J1-B			GND
	SW2-6	DP_TBA-7				PGM Mode
SW4	Mute Button					
	SW4-1	P10-6				GND
	SW4-2	P10-3				Mute Switch
LED	Alarm Indicator					
	RED	P10-2				Reg 12V - LED
	WHT	P10-5				Led Control
BUZZER						
	BZ+	J4-A	J10-2			Reg +12
	BZ-	PCB_J9-9				Buzz Control
GND LUG						
	PCB_J2-3	PCB_J1-9	J1-B	J7-F		
	J10-6	J11-2	J11-8	J11-11		